STANDARDS ITS TRAINING

WELCOME

RITA Intelligent Transportation Systems Joint Program Office

Welcome

Shelley Row, P.E., PTOE

Director

ITS Joint Program Office

Shelley.Row@dot.gov

RITA RESEARCH AND INNOVATIVE TECHNOLOGY ADMINISTRATION
INTELLIGENT TRANSPORTATION SYSTEMS

About RITA | Communities of Interest | Contact Us | Press Room | RITA Offices | Site Map | Search

About Us | T3 Webinars | ITS Peer-to-Peer | Resources | Local ITS PCB | Testimonials

Updated June 3, 2011

ITS Professional Capacity Building Program

Welcome to ITS Professional Capacity Building

The ITS Professional Capacity Building (PCB) Program provides comprehensive, accessible, and flexible ITS learning for the transportation industry. By using the program, public agencies can build and sustain a capable and technically proficient ITS workforce, and transportation professionals can develop their knowledge, skills, and abilities while furthering their career paths.

The plan, ITS Professional Capacity Building: Setting Strategic Direction 2010-2014, describes the strategy the ITS PCB Program is pursuing to create a 21st century learning environment and build an ITS profession that leads the world in the innovative use of ITS technologies.

News

- **Act Now!** Fee Waived for June CITE Blended Course
- NTI Offering: Implementing Rural Transit Technology
- T3 Webinar playback and archives now available for 1/18/2011 webinar: "The Emergence of Open Electronic Payment Systems in Public Transit"
- New NTI Course: Implementing Contactless Fare Collection Systems
- T3 Webinar Archive Now Available: Open Source Alternative to Deploying Transportation Management Systems
- T3 Webinar Archive Now Available: TSAG Case Studies Workshop and Webinar - NG9-1-1 What's Next Forum & Webinar
- Two new CITE offerings: Road Weather Information Systems (RWIS) Equipment and Operations and Configuration Management for Traffic Management Systems
- Added to the T3 Archives: 8/3/10 Webinar: TSAG Case Studies Workshop and Webinar — 2009 Fort Hood, Texas Army Base Shooting Incident: A Multi-Agency

ITS Technical Assistance

The ITS PCB Program offers technical assistance resources to State and local transportation agencies, and to FHWA Field Offices.

- ITS Peer-to-Peer Program helps resolve ITS challenges by speaking to your peers.
- The ITS Help Line provides technical support by e-mail or telephone 866-367-7487.

Scheduled T3 Webinars

Register now for these upcoming T3 webinars:

June 23, 2011 1:00 PM – 2:30 PM ET
2011 Enhancements to the ITS Knowledge Resources Websites: Improving Access to Information on ITS Benefits, Costs, Lessons Learned and Deployment

June 29, 2011 1:00 PM – 2:30 PM ET
Open Payments, Mobile Payments and Personal Identification Verification (PIV) Acceptance – Overview of Innovations in Public Transit Payment Systems

View T3 webinar archives.

WWW.PCB.ITS.DOT.GOV/STANDARDSTRAINING

A311b
Specifying Requirements for DMS Systems Based on NTCIP 1203 Standard

Target Audience

- Transportation operation managers
- Transportation operations personnel
- System integrators
- Device manufacturers
- Specification writers
- DMS procurement officers

Instructor

Patrick Chan, P.E.

Senior Technical Staff

Consensus Systems Technologies (ConSysTec)

Flushing, NY, USA

Recommended Prerequisites

- I101 - Using ITS Standards: An Overview
- A101 - Introduction to Acquiring Standards-based ITS Systems
- A102 – Introduction to User Needs Identification
- A201 - Details on Acquiring Standards-based ITS Systems
- A311a – Understanding User Needs for DMS Systems Based on NTCIP 1203 Standard

Curriculum Path (SEP)

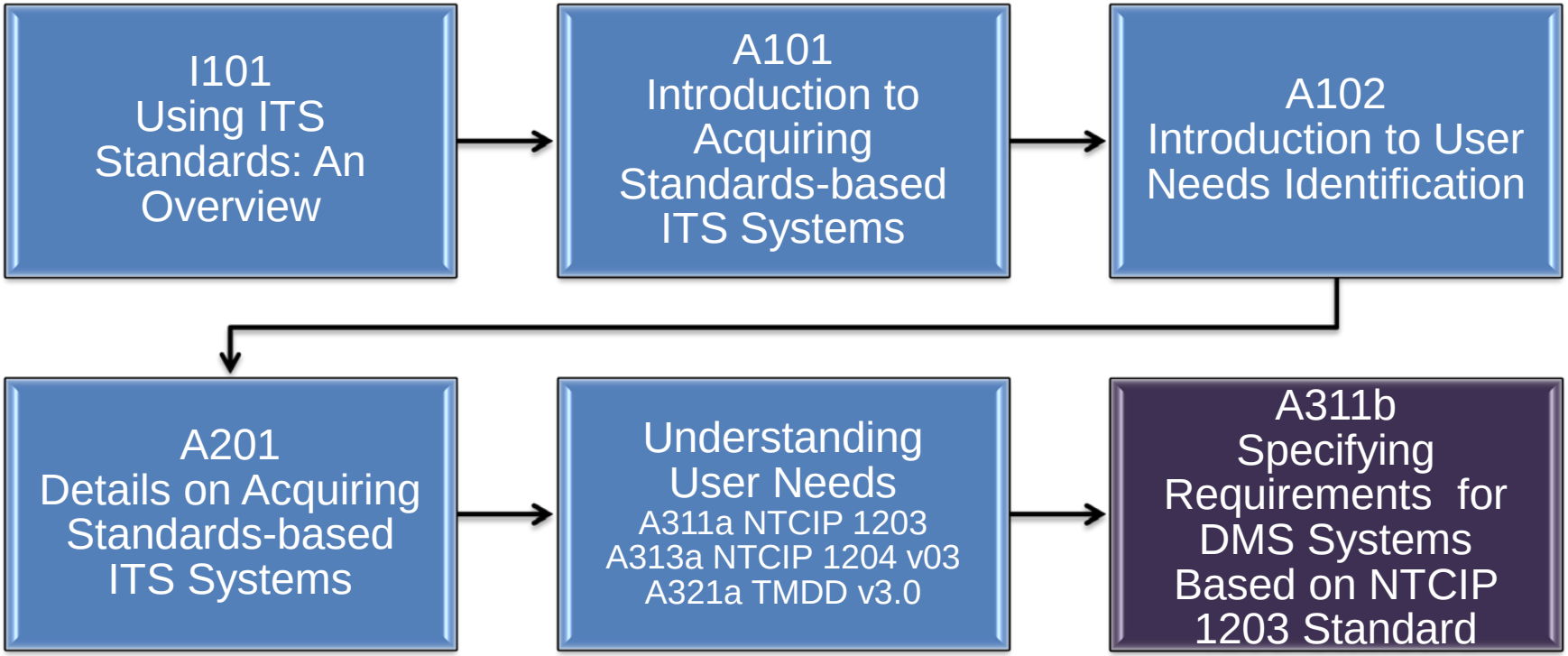

Value of DMS Sequence

- Module A311b – Specifying DMS Requirements is part of a group of PCB modules developed and sponsored by USDOT.
- DMS-related modules should be viewed as a group and taken together and in sequence.
- Group consists of:
  - A311a – Understanding User Needs Dynamic Message Signs (DMS) Systems Based on NTCIP 1203 Standard
  - A311b – Specifying Requirements for DMS Systems Based on NTCIP 1203 Standard
  - T311 – Applying your Test Plan to the NTCIP 1203 v03 DMS Standard

Learning Objectives

1. Discuss the structure of the standard
2. Use the requirements traceability matrix (RTM) and protocol requirements list (PRL) to specify the standardized structure of requirements
3. Include the requirements from the PRL and RTM in the specification
4. Specify requirements not covered by the standard

Review of NTCIP 1203

What is NTCIP 1203?

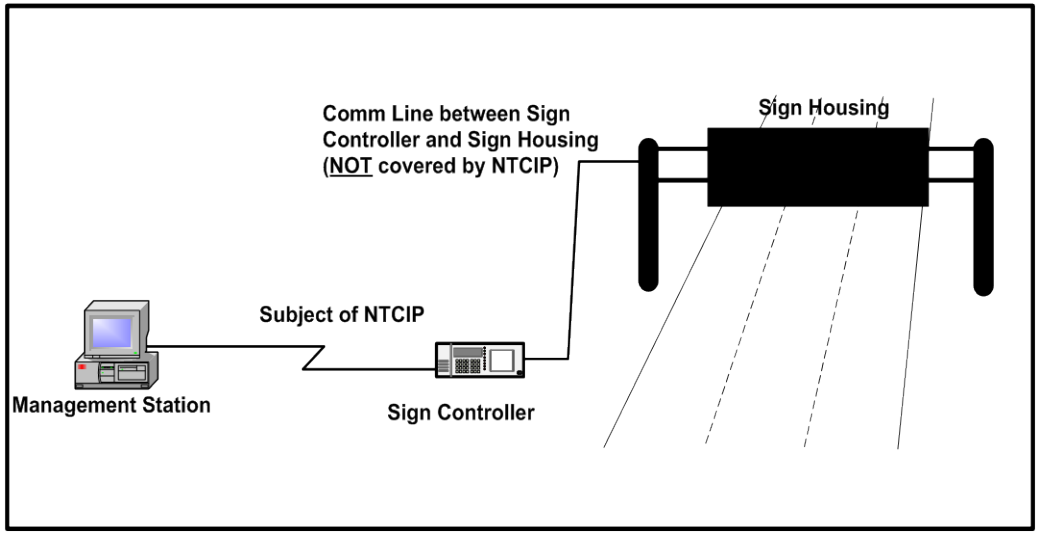

- Communications interface standard
- Specifies the interface between the dynamic message signs (DMS) in the field and the host systems that control them
- Contains the object definitions (vocabulary) that allows for the monitoring and control of DMS's

Review of NTCIP 1203

What is NTCIP 1203?

- NTCIP 1203 v01 – No SEP – Only defines design details
- NTCIP 1203 v02 – SEP
  - Defines user needs supported by the standard
  - Defines requirements supported by the standard
  - Defines a single design for each requirement
    - BETTER SUPPORTS INTEROPERABILITY!
- NTCIP 1203 v03 – Adds test cases and test procedures

POLLING

Poll

Please indicate if your agency has deployed dynamic message signs using standards before.

1. Using NTCIP 1203 v01 DMS Standard
2. Using NTCIP 1203 v02 DMS Standard
3. Not using any DMS Standard
4. Not sure

Review of NTCIP 1203

Comparison of Table of Contents

NTCIP 1203 v01

Section 1 General

Section 2 DMS Object Definitions

Section 3 MULTI

Section 4 Group Definitions

Section 5 Conformance Statements

NTCIP 1203 v02

Section 1 General

Section 2 Concept of Operations

Section 3 DMS Functional Requirements

Section 4 Dialogs

Section 5 Management Information Base

Section 6 MULTI

Annex A Requirements Traceability Matrix

Annex D Documentation of Revisions

- NTCIP 1203 v03 adds Annex C – Test Procedures

Requirements in NTCIP 1203

What are Requirements?

- Requirements definition (INCOSE *Systems Engineering Handbook*)
  - A statement that identifies a system, product, or process' characteristic or constraint, which is unambiguous, clear, unique, consistent, standalone (not grouped), and verifiable and is deemed necessary for stakeholder acceptability.
  - In the form of "shall" statements
- See Module A103 (Introduction to ITS Standard Requirements Development) to review well-formed requirements

Requirements in NTCIP 1203 v02

- **Functional Requirements Section (Section 3) includes:**
  - Tutorial
  - Scope of the interface
  - Protocol requirements list (PRL)
  - Architectural requirements
  - Data exchange and operational environment requirements
  - Supplemental non-communications requirements

Requirements in NTCIP 1203

Architectural Requirements

- **Section 3.4 of NTCIP 1203 v02**
  - Requirements related to the communications capabilities of a DMS system
  - Architecture requirements supported by NTCIP 1203 v02
    - Support basic communications
    - Support logged data
    - Support exception reporting
    - Manage access

Requirements in NTCIP 1203

Data Exchange Requirements

- Section 3.5 of NTCIP 1203 v02 - requirements related to data exchanges
  - **Manage the DMS configuration**
    - Identify DMS – sign type and technology
    - Determine message capabilities
      - Determine basic message capabilities – size, beacons, access
      - Determine matrix capabilities – sign face size and character size in pixels, pixel spacing
      - Determine VMS message display capabilities – maximum number of pages, maximum message length, supported color schemes, message display capabilities

Requirements in NTCIP 1203

Data Exchange Requirements

- Manage the DMS configuration (Continued)
  - Manage fonts – Determine maximum number of fonts supported, determine maximum character size, determine maximum number of characters per font, retrieve a font definition, configure a font, delete a font, validate a font
  - Manage graphics – Determine maximum number of graphics, determine maximum graphic size, determine available graphics memory, retrieve a graphic definition, store a graphic definition, delete a graphic, validate a graphic
  - Configure brightness of sign – Determine maximum number of light sensor levels, configure light output algorithm, determine current light output algorithm

Requirements in NTCIP 1203

Data Exchange Requirements

- **Control the DMS**
  - Manage control source
  - Reset the sign controller
  - Control the sign face – Activate a message, manage default message display parameters, manage message library, schedule messages for display, configure event-based message activation
  - Control external devices – Determine configuration of external device ports, monitor external devices, control external devices
  - Control sign brightness – Determine number of brightness levels, determine current photocell readings, manually direct-control brightness
  - Manage the exercise of pixels

Requirements in NTCIP 1203

Data Exchange Requirements

- **Monitor the status of the DMS**
  - Perform diagnostics – Test operational status of DMS components, provide general DMS error status information, identify problem subsystem, monitor subsystems status details (e.g., power errors, lamp errors, pixel errors, light sensor errors, climate-control system errors, sign housing temperature, sign housing humidity, cabinet temperature, cabinet humidity, drum sign rotor)
  - Monitor the current message – Monitor information about the current message
  - Monitor status of DMS control functions
- **Providing for multi-version interoperability with NTCIP 1203:1997**

Requirements in NTCIP 1203

Supplemental Requirements

- **Section 3.6 of NTCIP 1203 v02 - Non-communications-related requirements**
  - Supplemental requirements for fonts
  - Supplemental requirements for general illumination brightness
  - Supplemental requirements for control modes
  - Supplemental requirements for message activation
  - Supplemental requirements for message definition
    - For example, justification, pages, colors, moving text, data fields

ACTIVITY

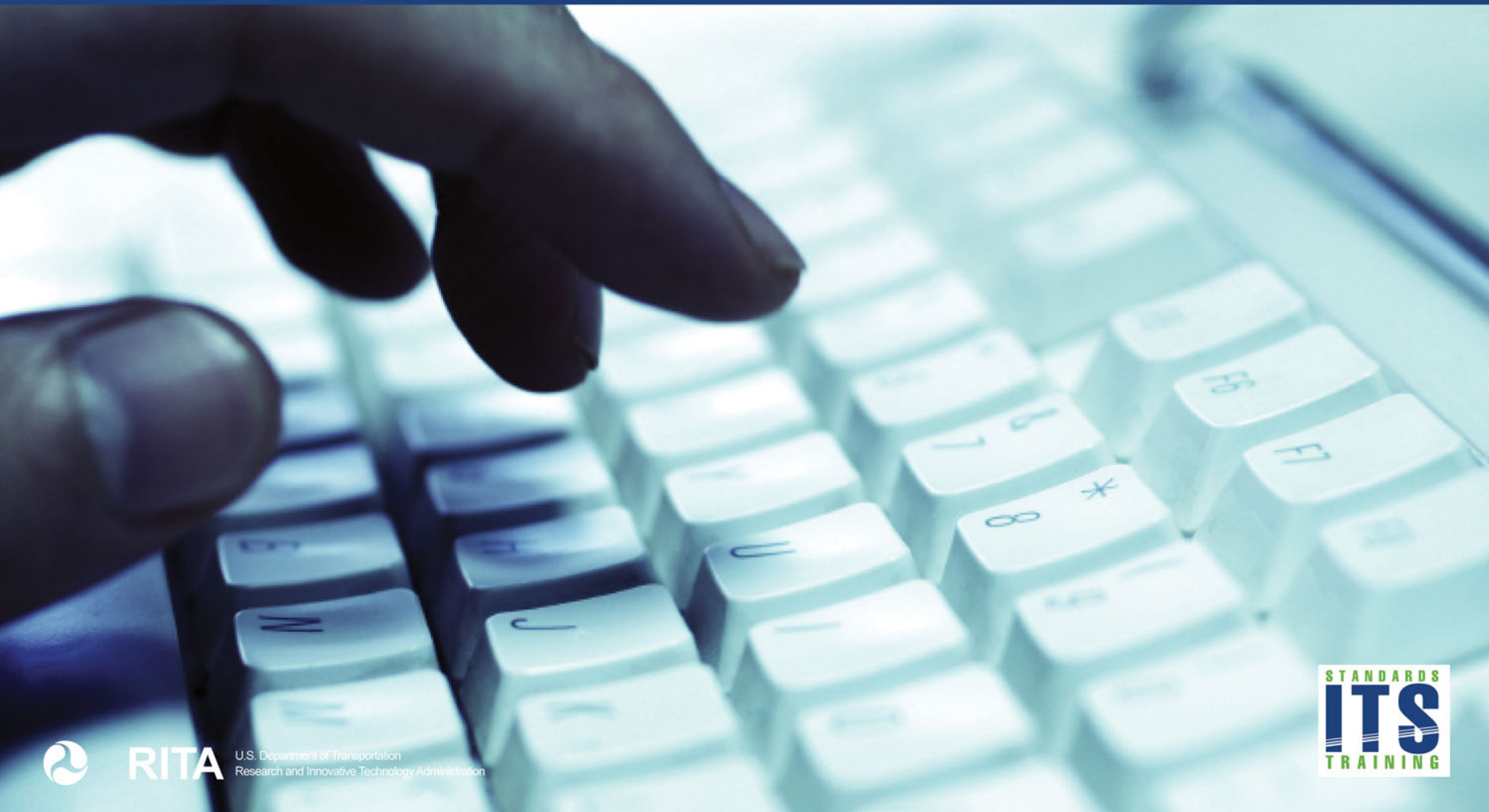

RITA U.S. Department of Transportation
Research and Innovative Technology Administration

STANDARDS ITS TRAINING

Exercise

Which of the following requirements fulfill this user need?

This feature enables the operator to determine which component(s) of a subsystem are reporting errors and/or warnings so that the operator can plan a proper response.

1. Monitor power errors
2. Manage the exercise of pixels
3. Manually control brightness

Type your answer in the chat pod

Protocol Requirements List (PRL)

Definition

- A table that maps the user needs to the requirements
- Could be part of agency's specification
- Specifies the standard (defines the communications interface)
- Designed to help specify what you want the interface to do

Protocol Requirements List (PRL)

User Needs and Requirements

USER NEED SECTION NUMBER	USER NEED	FR SECTION NUMBER	FUNCTIONAL REQUIREMENT	CONFORMANCE	SUPPORT / PROJECT REQUIREMENT	ADDITIONAL PROJECT REQUIREMENTS
2.5.3	Monitor the Status of the DMS			M	Yes	
2.5.3.1	Perform Diagnostics			M	Yes	
2.5.3.1.1	Determine Sign Error Conditions - High-Level Diagnostics			M	Yes	
		3.5.3.1.1.1 (LampTest)	Execute Lamp Testing	Lamp OR Fiber:M	Yes / NA	
		3.5.3.1.1.2 (PixelTest)	Activate Pixel Testing	Matrix:M	Yes / NA	
		3.5.3.1.1.3 (ClimateTest)	Execute Climate-Control Equipment Testing	O	Yes / No	
		3.5.3.1.2	Provide General DMS Error Status Information	M	Yes	

- Only select the user needs supported by the standard that satisfy your operational needs
- Based on the user needs selected, the PRL identifies the requirements associated with those user needs and supported by the standard.

Protocol Requirements List (PRL)

Conformance

USER NEED SECTION NUMBER	USER NEED	FR SECTION NUMBER	FUNCTIONAL REQUIREMENT	CONFORMANCE	SUPPORT / PROJECT REQUIREMENT	ADDITIONAL PROJECT REQUIREMENTS
2.5.3	Monitor the Status of the DMS			M	Yes	
2.5.3.1	Perform Diagnostics			M	Yes	
2.5.3.1.1	Determine Sign Error Conditions - High-Level Diagnostics			M	Yes	
		3.5.3.1.1.1 (LampTest)	Execute Lamp Testing	Lamp OR Fiber:M	Yes / NA	
		3.5.3.1.1.2 (PixelTest)	Activate Pixel Testing	Matrix:M	Yes / NA	
		3.5.3.1.1.3 (ClimateTest)	Execute Climate-Control Equipment Testing	O	Yes / No	
		3.5.3.1.2	Provide General DMS Error Status Information	M	Yes	

- Identifies if the user need (or requirement) is mandatory (M) or optional (O)
- Predicates – conformance may depend on whether a condition or feature is supported

Protocol Requirements List (PRL)

Support/Project Requirement

- The procurer selects the user needs and associated requirements desired for his or her implementation.

USER NEED SECTION NUMBER	USER NEED	FR SECTION NUMBER	FUNCTIONAL REQUIREMENT	CONFORMANCE	SUPPORT / PROJECT REQUIREMENT	ADDITIONAL PROJECT REQUIREMENTS
2.5.1.4 (Graphics)	Manage Graphics			VMS:O	Yes / No / NA	
		3.5.1.4.1	Determine Maximum Number of Graphics	M	Yes	The DMS shall support at least _____ graphics.
		3.5.1.4.2	Determine Maximum Graphic Size	M	Yes	The DMS shall support a maximum graphic size of _____ bytes.
		3.5.1.4.3	Determine Available Graphics Memory	M	Yes	The DMS shall support a maximum graphic block size of _____ bytes.

Protocol Requirements List (PRL)

Additional Project Requirements

- Provides additional notes or requirements for the product to be procured or provides any additional details about the implementation.
  - Provides spaces for the specifier to indicate the performance requirements.

USER NEED SECTION NUMBER	USER NEED	FR SECTION NUMBER	FUNCTIONAL REQUIREMENT	CONFORMANCE	SUPPORT / PROJECT REQUIREMENT	ADDITIONAL PROJECT REQUIREMENTS
2.5.1.4 (Graphics)	Manage Graphics			VMS:O	Yes / No / NA	
		3.5.1.4.1	Determine Maximum Number of Graphics	M	Yes	The DMS shall support at least _____ graphics.
		3.5.1.4.2	Determine Maximum Graphic Size	M	Yes	The DMS shall support a maximum graphic size of _____ bytes.
		3.5.1.4.3	Determine Available Graphics Memory	M	Yes	The DMS shall support a maximum graphic block size of _____ bytes.

Protocol Requirements List (PRL)

Completing the PRL - Review

- The specifier and procuring agency is cautioned against selecting all requirements.
  - Increases the cost of procuring the DMS system and also testing
  - For example, if the DMS uses LEDs, why would an agency require support for lamp testing?

Protocol Requirements List (PRL)

Example

- The user need "Activate and Display a Message" is a mandatory user need for the standard.
  - All the requirements associated with this user need, except "Activate a Message with Status," unless the DMS is a drum sign, are also mandatory.

USER NEED SECTION NUMBER	USER NEED	FR SECTION NUMBER	FUNCTIONAL REQUIREMENT	CONFORMANCE	SUPPORT / PROJECT REQUIREMENT	ADDITIONAL PROJECT REQUIREMENTS
2.5.2.3	Control the Sign Face			M	Yes	
2.5.2.3.1	Activate and Display a Message			M	Yes	
		3.5.2.3.1	Activate a Message	M	Yes	
		3.5.2.3.3.5	Retrieve Message	M	Yes	
		3.5.2.3.6	Activate a Message with Status	Drum:M	Yes / NA	
		3.6.5 †	Supplemental Requirements for Message Activation Request	M	Yes	
		3.6.7 †	Supplemental Requirements for Locally Stored Messages	M	Yes	

POLLING

Poll Exercise

Which of the following elements is not a purpose of the PRL?

1. Associate user needs with requirements
2. Specify the requirements for a specific project
3. Determine which objects to use
4. Determine what requirements are mandatory to conform to the standard

Requirements Traceability Matrix (RTM)

- **Intended audience**
  - Device vendors
  - Central system developers
  - Conformance testers
- **Describes the (standard) design for fulfilling a requirement (supported by the standard).**
  - Requirements can be traced in a standardized way
  - Reduces design work
  - Supports interoperability
- **Design consists of a dialog (sequence of data exchanges) and object(s) to be exchanged.**

Requirements Traceability Matrix (RTM)

- To conform to a requirement (in the standard), a DMS system must support the standardized dialogs and objects specified in the standard, with the expected result

- Results in interoperability – all systems shall satisfy a specified requirement ***the same way***

Requirements Traceability Matrix (RTM)

Requirements Traceability Matrix (RTM)					
FR ID	**Functional Requirement**	**Dialog ID**	**Object ID**	**Object Name**	**Additional Specifications**
3.5	Data Exchange and Operational Environment Requirements				
3.5.1	Manage the DMS Configuration				
3.5.1.1	Identify DMS				
3.5.1.1.1	Determine Sign Type and Technology	G.1			
			5.2.2	dmsSignType	
			5.2.9	dmsSignTechnology	

- First lines are the headings of the RTM
- FR ID – Section number of the functional requirement (FR)
- Functional requirement - Title (description of the FR)
- Dialog ID – Section number of the dialog associated with this FR

Requirements Traceability Matrix (RTM)

Requirements Traceability Matrix (RTM)					
FR ID	**Functional Requirement**	**Dialog ID**	**Object ID**	**Object Name**	**Additional Specifications**
3.5	Data Exchange and Operational Environment Requirements				
3.5.1	Manage the DMS Configuration				
3.5.1.1	Identify DMS				
3.5.1.1.1	Determine Sign Type and Technology	G.1			
			5.2.2	dmsSignType	
			5.2.9	dmsSignTechnology	

- Object ID – Section number of the object(s) that will fulfill this FR
- Object name – Name of the object(s) that will fulfill this FR
- Additional specifications - Provides additional notes on how the design can be implemented to fulfill the requirement

Requirements Traceability Matrix (RTM)

Example

Requirements Traceability Matrix (RTM)					
FR ID	**Functional Requirement**	**Dialog ID**	**Object ID**	**Object Name**	**Additional Specifications**
3.5.2.3	Control the Sign Face				
3.5.2.3.1	Activate a Message	4.2.3.1			
			5.7.3	dmsActivateMessage	
			5.11.2.1.1	shortErrorStatus	
			5.7.17	dmsActivateMsgError	
			5.7.24	dmsActivateErrorMsgCode	
			5.7.18	dmsMultiSyntaxError	
			5.7.19	dmsMultiSyntaxErrorPosition	
			5.7.20	dmsMultiOtherErrorDescription	

- The requirement, 3.5.2.3.1, “Activate a Message,” is fulfilled by using standardized dialog 4.2.3.1; and relates to or uses the objects: dmsActivateMessage, ShortErrorStatus, dmsActivateMsgError, dmsActivateErrorMsgCode, dmsMultiSyntaxError, dmsMultiSyntaxErrorPosition, and dmsMultiOtherErrorDescription.

Requirements Traceability Matrix (RTM)

Example

4.2.3.1 Activating a Message

The standardized dialog for a management station to activate a message on the sign display shall be as follows:

a) (Precondition) The management station shall ensure that the desired message is supported by the DMS. This may entail downloading the desired message contents to the DMS. (See Section 4.2.3.2.)

b) The management station shall SET dmsActivateMessage.0 to the desired value. This causes the controller to perform a consistency check on the message. (See Section 4.3.5 for a description of this consistency check.)

NOTE—dmsActivateMessage.0 is a structure that contains the following information: message type (permanent, changeable, blank, etc.), message number, duration, activation priority, a CRC of the message contents, and a network address of the requester.

Requirements Traceability Matrix (RTM)

Example

c) If the response indicates “noError,” the message has been activated and the management station shall GET shortErrorStatus.0 to ensure that there are no errors preventing the display of the message (e.g., a “criticalTemperature” alarm). The management station may then exit the process.

d) If the response from Step b) indicates an error, the message was not activated. The management station shall GET dmsActivateMsgError.0 and dmsActivateErrorMsgCode.0 to determine the type of error.

e) If dmsActivateMsgError equals “syntaxMULTI,” then the management station shall GET the following data to determine the error details:

1) dmsMultiSyntaxError.0
2) dmsMultiSyntaxErrorPosition.0

Requirements Traceability Matrix (RTM)

Example

Some dialogs are accompanied by an informative figure that provides a graphical depiction of the normative text.

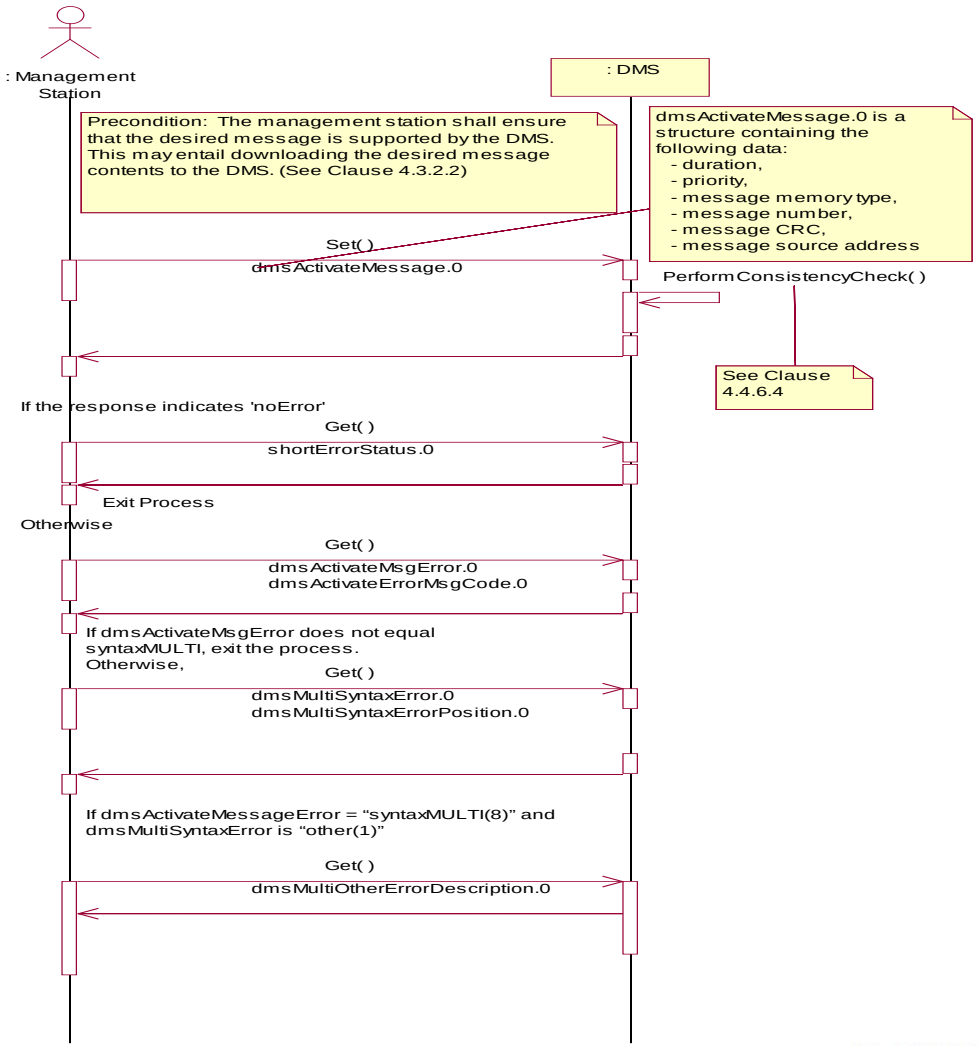

Requirements Traceability Matrix (RTM)

- The order of the data exchange is important, unless the dialogs state otherwise
- Interoperability may be compromised if the sequence of data exchanges is changed

POLLING

Poll Exercise

Which of the following elements are not part of the RTM?

1. User needs supported by the standard
2. Requirements supported by the standard
3. Standardized dialogs to fulfill requirements
4. Data objects to fulfill requirements

Building the Project Specification

Contract Documents

Product Specifications

Hardware Specifications	Software Specifications	Communication Interface Specifications
·Functional Reqts. ·Performance Reqts. ·Structural Reqts. ·Mechanical Reqts. ·Electrical Reqts. ·Environmental Reqts.	·Functional Reqts. ·Performance Reqts.	·Functional Reqts. ·Performance Reqts. ·Protocol Reqts.

Contract Requirements

·Contractual requirements during system development
·Contractual requirements during testing
·Contractual requirements during deployment/integration
·Contractual requirements during operations/maintenance

Building the Project Specification

- A completed PRL defines the project requirements for the communications interface
- The agency specification should specify the standards to be used for the system to be procured
  - Be specific to the version and date of issue of a standard
  - Include the completed PRL
  - Value ranges for all the objects to clarify parameters, such as the size of event logs, number of messages to be supported, etc.

Building the Project Specification

- Performance requirements for the system not covered by the NTCIP standards, except response times
  - For example, number of devices on a channel, time lag when polling a device, polling rate, etc.
  - Response times addressed in NTCIP 1103 (see below), unless specified otherwise in the data standard.

3.2.4 Response Time

The SNMP agent shall process all requests in accordance with Section 3, including processing the request sufficiently to generate the transmission of the appropriate response (assuming that the SNMP agent has permission to transmit) within the maximum Response Time. If the specification does not indicate the maximum Response Time, the maximum Response Time shall be 100 milliseconds plus one millisecond for each byte in the response variable-bindings field.

Building the Project Specification

- The requirements for the communications interface must be consistent with the hardware specification
  - For example, the communications interface should not require support for monitor lamp errors if the DMS uses LEDs
- Include statement that only standardized design solutions, as specified in the RTM, will be implemented for the requirements selected via the PRL
- Include a completed copy of the PRL plus a reference to the RTM as a source for the design of the system and the test plan

Extensions

- The NTCIP standards support extensions
  - For user needs not supported by the standard:
    - May result in user-specific requirements
    - Procurers and agencies should specify the dialogs and objects to fulfill the user-specific requirements
  - Implementers may NOT define new dialogs or objects for requirements already supported by the standard

ACTIVITY

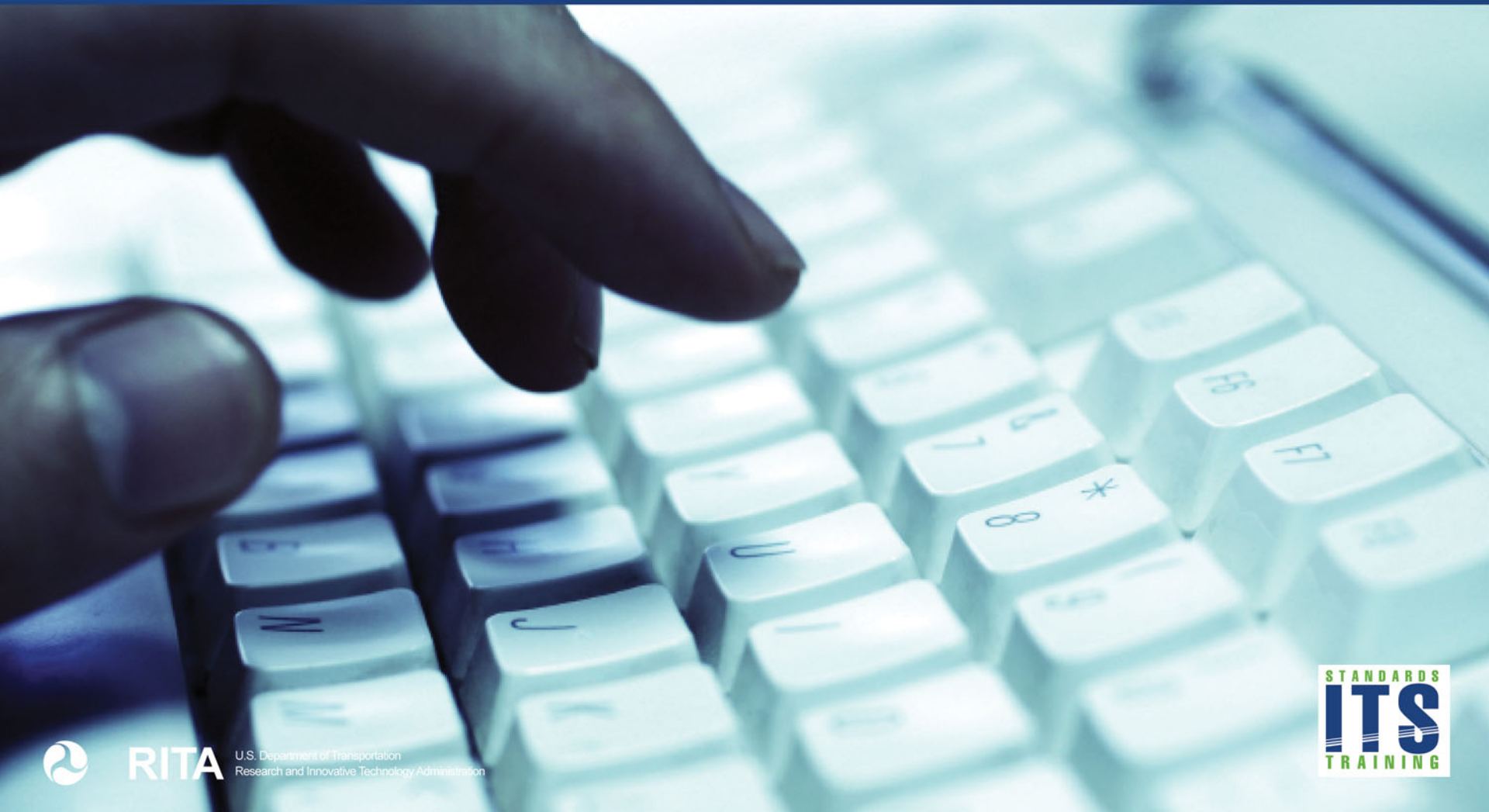

RITA U.S. Department of Transportation
Research and Innovative Technology Administration

STANDARDS ITS TRAINING

Extensions – Activity about Benefits/Drawbacks

What do you think are the benefits and drawbacks associated with extensions (allowing and creating them) to the NTCIP standards?

Type answer in the chat pod

Extensions

Benefits

- Allows procurers to use the NTCIP family of standards and still support operational or user needs not supported by the family

Extensions

Example

- Legibility is an important concern to Agency A. If a certain percentage of pixels are failed, the agency's operating procedures is to blank the sign until the sign can be repaired. This requirement is not support by NTCIP 1203.

Extensions

Example

- **Create 2 new objects**
  - Object A - Establish the criteria
  - Object B - Current percentage of pixels failed
- **Create a new dialog**
  - GET Object B
  - If the value of Object B is less than Object A, do nothing.
  - If the value of Object B is equal to or greater than Object A, blank the sign.
- **Update the PRL table and the RTM table**

Extensions

Drawbacks

- Interoperability may be compromised
  - Other management stations that do not support the new objects will be unable to exercise the new capabilities (e.g., for the legibility example, why the sign is blank?)
  - If the agency is not consistent on defining how the requirement is fulfilled for all DMS's, interoperability cannot be achieved.
  - Other agencies with the same requirement must have the same design if sharing control of devices.
- Test plans need to be expanded to support the new requirements

Extensions

Conformance

- By definition, implementations that add extensions not defined by a standard are no longer conformant to that standard

Summary

- Discuss the structure of the DMS Standard (NTCIP 1203 v02)
  - Supports additional functionality
  - Includes the systems engineering process
    - User Needs
    - Functional Requirements
    - Protocol Requirements List (PRL)
    - Design
  - Addresses Backwards Compatibility

Summary

- Use the requirements traceability matrix (RTM) and protocol requirements list (PRL) to specify the standardized structure of requirements
  - The PRL traces the user needs to the requirements
  - The RTM traces the requirements to the design
    - Dialogs, data objects
  - The standard defines one design to fulfill a requirement
    - Supports Interoperability

Summary

- Include the requirements from the PRL and RTM in the specification
  - Defines the communications interface
  - Indicates the requirements for your implementation
- Specify requirements not covered by the standard
  - The standard supports extensions
  - Not recommended though – compromises interoperability

Resources

- NTCIP 1203 v3.04, Object Definitions for Dynamic Message Signs, Recommended Standard – Expected to be published 2011.
- NTCIP 1203 v2.039b, Object Definitions for Dynamic Message Signs – www.ntcip.org
- NTCIP 9001 v04, The NTCIP Guide – www.ntcip.org
- IEEE 830-1998 – IEEE Recommended Practice for Software Requirements Specification

Next Module

- Module T311 – Applying Your Test Plan to the NTCIP 1203 v03 DMS Standard
  - Reviews how to apply test plans to verify that a DMS system meets the agency specifications and the requirements supported by the standard
  - Shows the relationship between testing for conformance to the standard and how it fits into an overall testing program

QUESTIONS?

RITA U.S. Department of Transportation
Research and Innovative Technology Administration

STANDARDS ITS TRAINING